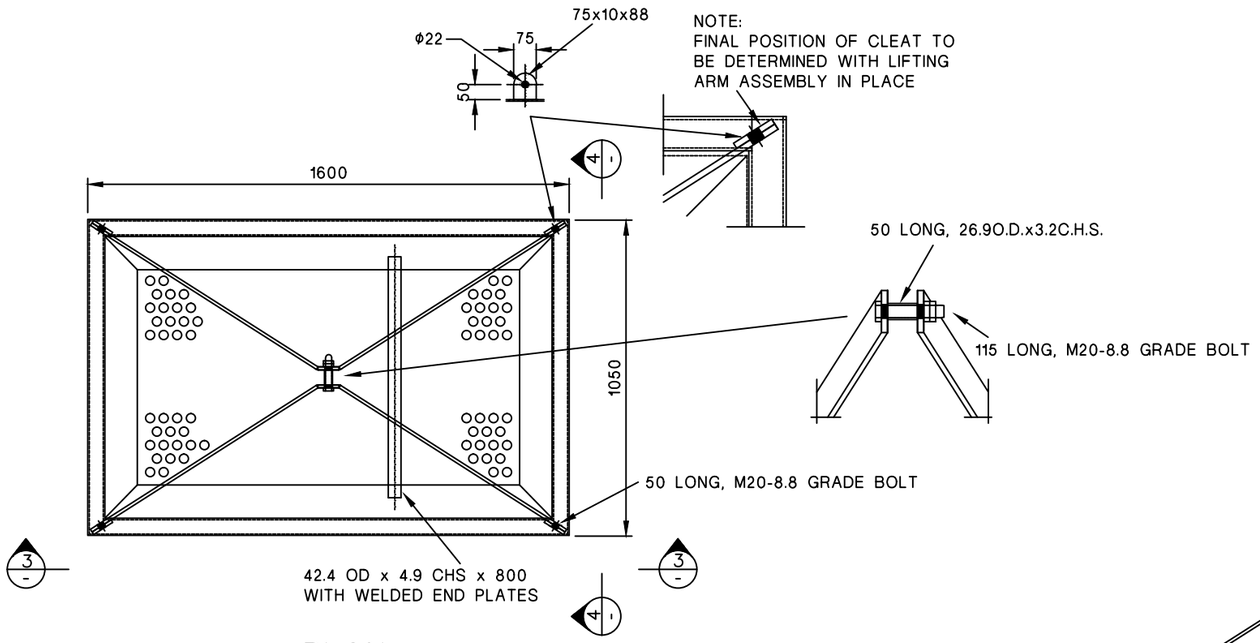

PLAN
SCALE 1:20

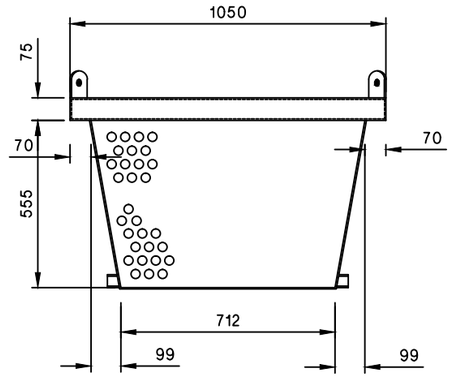

ELEVATION 4
SCALE 1:20

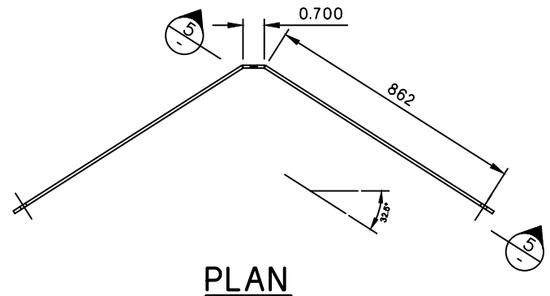

PLAN
LIFTING ARM
SCALE 1:20

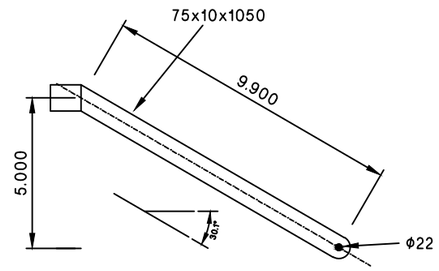

ELEVATION 5
SCALE 1:20

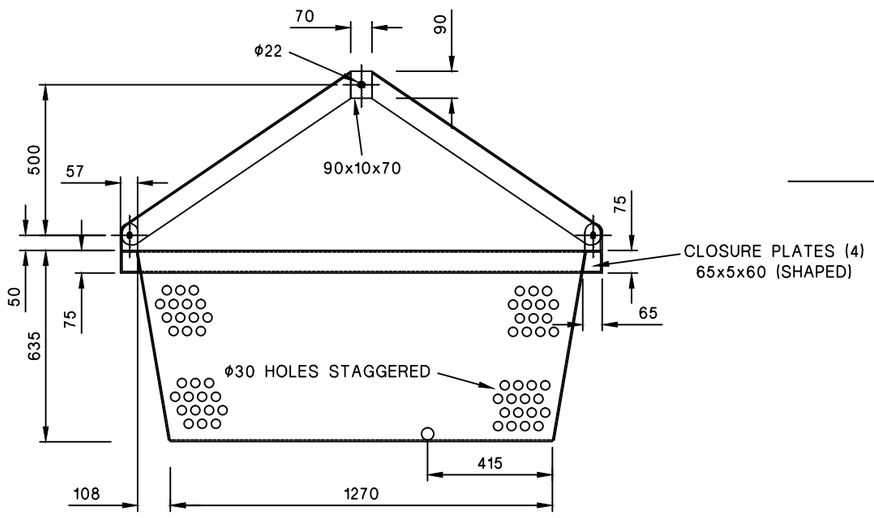

ELEVATION 3
SCALE 1:20

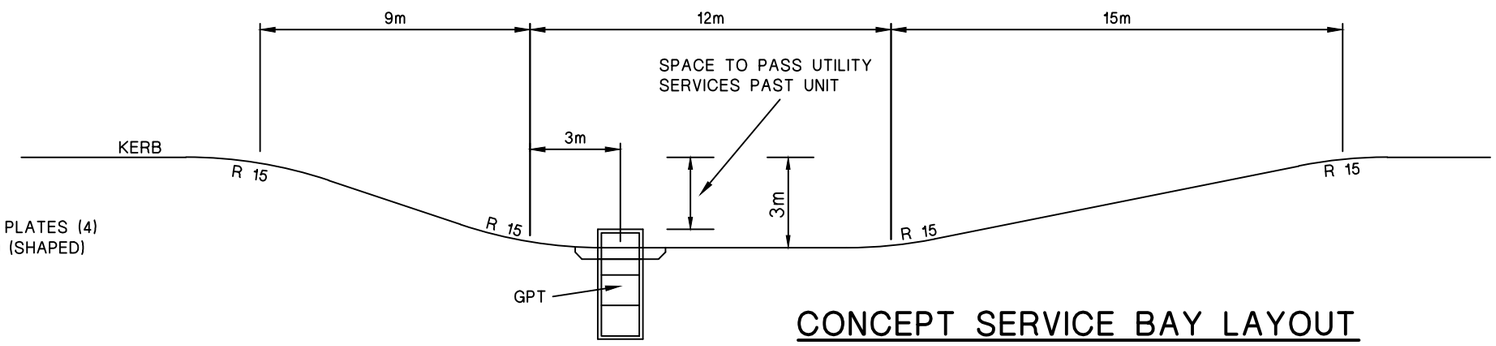

CONCEPT SERVICE BAY LAYOUT
ADJUST TO SUIT SITE REQUIREMENTS
SCALE 1:200

		SHEET 2 OF 2 SHEETS
THE HILLS Sydney's Garden Shire	THE HILLS SHIRE COUNCIL	DATE: AUG. 2010
	LITTER SKIP GROSS POLUTANT TRAP	DRAWING No.: SD.12